Design of Braking System for Go-kart

Himank Ambashta[1], Charanjeev Mehndiratta[2], Nitin Waghmare[3]
[1,2]Students, [3]Assistance Professor, Department of Mechanical Engineering, Manav Rachna International University, Faridabad, India

Abstract – This paper accounts for the design and formulation of mathematical calculations for the braking system of Go Kart vehicle. In addition, of good air bags, suspension system, better handling and safe cornering, there is another important system i.e. braking system, without which the vehicle cannot function. It is righteous to say without the braking system in the vehicle the passenger's life is in danger therefore it plays the vital role to the manufacturing of the vehicle. Now days we are moving towards the improvement to our technology. Automotive sector is one of the big step towards the technological improvements, which is possible thorough creativity and innovation of young automobile enthusiasts. Carting is commonly perceived as the stepping stone to the formula one car. It is generally terms as the most economic form of motor sport available. Go-karts have 4 wheels and a small engine. [1] They are widely used in racing in US and also, they are getting popular in India. Our main focus is formulating the design of the high-performance braking system having considerable stopping distance, without showing fatigue crack on Disc rotor and to meet the general safety requirement.

Keywords- Go kart, Disc brakes, caliper, racing kart, Master cylinder.

1. INTRODUCTION

The hydraulic disc brakes are used in motor vehicle to slow down its rotational motion by the help of the frictional force. It is caused by pushing the brake pads against the disk rotor. In rear axle of most LMVs, drum Brake [2] are used however Disc brakes are much better than drum-brakes as it provides sufficient friction to stop the vehicles. In order of preference, disc brakes are more preferential than Drum brakes as it dissipate heat better, is more reliable and stable for driver to use. It converts Kinetic Energy into heat energy that dissipates thought the rotor vents and slows down the vehicle. It works on hydraulic Brake fluid pressure which, when applied by the driver, exerts the force over the wheel caliper assembly which eventually pushed the brake pads to the dice rotor. Disc brake offers much better stopping performance. The concept of disc brakes was first introduced in England [3] Disc rotor is made up of cast iron disc which bolted to the caliper assembly which his mounted-on wheel hub. It is then connected to the axle of the vehicle. [4]

2. SELECTION AND PRE-REQUISITE CALCULATIONS

These are considerations and certain selections that are selected for the better and safe braking.

Table 1: Parts and Specifications

S No.	PARTS	SPECIFICATIONS
1	Mass of Go kart	14.7 kg
2	Master Cylinder [5]	Diameter - 15.87mm Area - 0.000197mm^2
3	Caliper [6]	Diameter – 44.45mm Area – 3102 mm^2
4	Number of caliper piston	2
5	Paddle Ratio	6:1
6	Coefficient of friction between tire and road (μ_1)	0.7
7	Coefficient of friction between brake pad and disc rotor (μ_2) [7]	0.4
8	Rotor	Diameter -190mm Thickness – 4mm Material – high centric carbon
9	Brake fluid Type	DOT 4
10	Weight Distribution	Front - 40% Rear - 60%

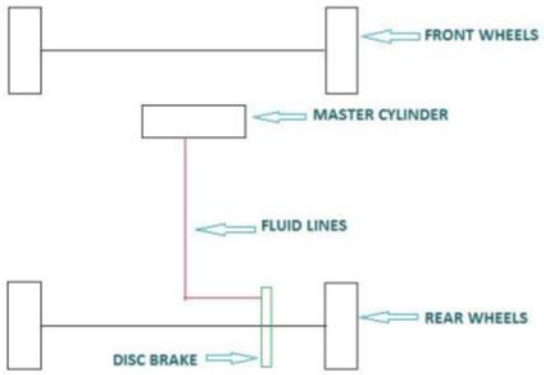

Figure 1: Layout of braking circuit

3. PORPOSED MODELLING

3.1. Normal Force at Front and Rear Axle:

N(front) = mass * g*c; where c is weight distribution [8]

= 14.7 x 9.81 x 0.4 = 57.68N

N(rear) = mass * g*c

= 14.7 x 9.81 x 0.6 = 86.52N

3.2. Frictional forces at front and rear axle:

f(front) = μ_1x N(front) = 0.7x 57.68 = 40.37N (refer: Table 1, Sno.6)

f(rear) = μ_1x N(rear) = 0.7x 86.52 = 60.56N

3.3. Acceleration of go-kart:

Total frictional force (front+rear) = 100.93N

According to newton's second law

F= ma

a=F/m = 100.93/14.7 = -6.86m/s^2 (0.7G)

3.4. Stopping time and distance:

Go kart is starting from rest, therefore v=0

In accordance to Newton's first equation of motion

Final vel. = ini vel. + acceleration x time

i.e.; v=u +at therefore, t = (v-u)/ a

= (13.8)/6.86

= 2.02 sec

In accordance to Newton's third equation of motion

2 x acc.x distance = (final vel) ^{2} – (ini. vel.)^2

Therefore d = v^2 / 2a = (13.8)^2/ (2*6.86)

= 13.8 m

3.5. Brake fluid pressure:

Brake paddle force = 445N

Given, paddle ratio = 6:1

Force at the end of pushrod to master cylinder =2669N

Force= pressure x area

Therefore, p = F/a = 2669/0.000197

= 13.54 N/mm^2(1965 PSI)

3.6. Clamping force:

Clamping force = fluid pressure / area of caliper

= 13.54 x 3102 = 42026N

3.7. Friction on rear tire:

f(rear)=μ_2x clamping force (refer: Table 1, Sno.7)

= 0.4x 42026.65 =16810.66N

3.8. Static laden radius (L): [9]

Radius of rear tire = 139.7mm

Therefore, L = 0.96 x 139.7 =134.11mm

A. Braking torque:

Braking torque = f(rear) x L = 16810.66 x 134.11

= 2254.47 N-m

3.9. Weight distribution:

Wheel base =1336mm

Centre of gravity (COG) is 796 mm from the front.

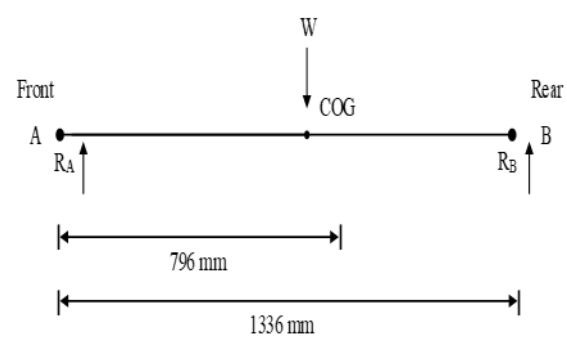

Taking moment about point A, we get [10]

R_B x 1336 + R_A x 0 = 145 x 796

R_B = 86.39 N

Thereafter, R_A = 58.61 N

3.10. Brake Efficiency (η):

Maximum vel. = 13.8m/s

η = [(final vel.)^2 / 2 x g x d] x 100 [11]

= [(13.8)^2 / 2 x 9.81 x 13.8] x 100

4. CONCLUSIONS

The purpose of studying behind designing the braking system is to get the better and safe braking abilities with minimum stopping time at the considerable distance. There are various mathematical formulae, which are derived from the fundamental in order to calculate the parameters needed for the go-kart braking system. Thus, after verifying the calculations we conclude that our design is safe for fabrication.

5. ACKNOWLEDGEMENT

We would like to thank Mr. Nitin Waghmare, Assistant Professor, FET, Department of Mechanical Engineering, Manav Rachna International University, for his timely support and guidance.

REFERENCES

[1] J K Gupta and R S Khurmi, "A Textbook of Machine Design", S Chand; 25th Revised edition edition. 3 July 2005, ISBN-10: 8121925371, ISBN-13: 978-8121925372

[2] D. Swat, "Automotive engineering", 1984,92(10), 95-98

[3] Anjul Chauhan, Lalit Naagar and Sparsh chawla "Design and Analysis of a Go-Kart", International Journal of Aerospace and Mechanical Engineering, volume 3 – issue no.5, September 2015.

[4] Ayush Gandhi and Harsh Kansal, "Troubleshooting and Its Solutions in Designing of a Smart Go Kart", IJRMET Vol. 4, spl- 2 May October 2017, ISSN: 2249-5762 (Online).

[5] Joes Racing Product. Master Cylinder Math. Jeff Butcher. From http://www.joesracing.com/rt-4172-master-cylinder- math.html.

[6] Brake power. Total Aer of caliper piston. (n.d.). variety. From http://brakepower.com/help_abc_27_PAC_t.htm. Retrieved on January 1 2017. © Vanrossen 2011-2017

[7] Wikipedia. The free encyclopedia. Brake lining. From https://en.wikipedia.org/wiki/Brake_lining. Edited on May11 2017

[8] David Halliday, Robert Resnick, Jearl Walker, "Fundamental of physics", Sixth edition, vol-1, 2014

[9] Car bibles. The wheels and Tire Bible. Chris Longhurst. From http://www.carbibles.com/tyre_bible_pg4.html. Updated on January 21 2017. Copyright ®1994-2017

[10] Dr. D.S. Kumar, "Engineering Mechanics" (Statics &Dynamins), 4th Revised Edition, S.K. Kararia& Sons, ISBN 13- 978-93-5014-292-9, Isbn-10: 81- 88-458-16-3

[11] Carroll Smith, "Tune to Win", Aero Publishers.1978, ISBN-0-87938-071-3