Matlab Simulation of Speed Control of D.C. Motor by Using Chopper

Vrushali R. Pote
Electrical (Electronics & power) Engg. , SGBAU/DES's COET, Dhamangaon Rly, Maharashtra, India.

Monika K. Suryawanshi
Electrical (Electronics & power) Engg. , SGBAU/DES's COET, Dhamangaon Rly, Maharashtra, India.

Apurva A. Bhalerao
Electrical (Electronics & power) Engg. , SGBAU/DES's COET, Dhamangaon Rly, Maharashtra, India.

Abstract – The proposed work express the speed control of separately excited DC motor using MATLAB Simulation. Basically, chopper is used as converter to control the speed of DC Motor. Chopper firing circuit gets signal from controller and further to achieve desire speed chopper signal from controller i.e. variable voltage given to the armature of the motor. The current and speed controllers are used for controlling purpose and to get stable and high speed control of DC motor. Eventually, the model is utilized with MATLAB (SIMULINK) under varying speed and torque condition.

Index Terms – Chopper Circuit, MATLAB (SIMULINK), Proportional Integral (PI) Controller, Separately Excited DC Motor, speed controller.

1. INTRODUCTION

DC Motors are generally well known for their excellent control of speed for acceleration and deacceleration. Basically, power supply is directly connects to the field of motor and causes voltage control which is necessary for applications which need control of speed and torque [1]. Now a days, motor with high performance drives quality are essential part of industrial applications because high performance motor drive system has special characteristics like dynamic speed command tracking and load regulation response [3].

Compare to AC drive, DC drive are normally cheaper for low horsepower ratings for adjustable speed purpose. AC drives would be more complex and expensive Hence, DC motor are identified as adjustable speed machine from many years. To control dc motor over wide range of speed the proper adjustment of the terminal voltage is necessary. In this paper, chopper is used as converter for controlling dc motor speed. Basically, chopper is static power electronics device which convert fixed dc input voltage to a variable dc output voltage. A chopper can be used to step down or step up the fixed dc input voltage like a transformer. It is generally preferred because of its smooth control capability, high efficiency and fast in response [4].

2. ARCHITECTURE OF D.C. MOTOR FOR DRIVE SYSTEM

Basically, the principle behind DC Motor speed control is that the output speed of DC Motor can be varied by controlling armature voltage keeping field voltage constant for speed below and up to rated speed. Combination of DC Motor, controller and converter is nothing but the electrical DC drive. Whatever may be the output signal obtained is compared with the reference speed and further error signal is fed to speed controller. If there is a difference in the reference speed controller and the feedback speed, controller output will vary.

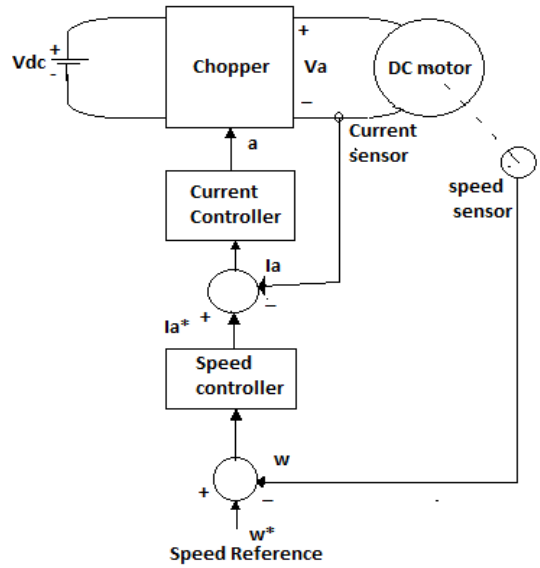

Fig.1: Architecture of D.C. Motor for Drive System

Initially DC voltage is given to the chopper and chopper is mainly performs the function of converting fixed dc voltage into variable dc voltage. Basically, chopper control the armature voltage of the motor.

The output obtain from dc motor are armature current and motor speed. Now consider reference speed (w*) to actual motor speed (w) and further with the help of summing block both the speed gets added and resulted signal is produced. It is further given to PI controller, PI controller also compare actual speed of motor and reference speed and output produce in the form of current i.e. I_{ref} and it will compared with current of motor i.e. I_a and generate a signal in the form of pulse and obtained pulse is given to gate terminal of chopper i.e. (GTO) and GTO gets turn on. further, GTO produces voltage and given to the motor and motor start running. The architecture of D.C. motor for drive system as shown in fig.1 above [1].

2.1 DC Chopper

A chopper is defined as the device that converts fixed dc input voltage to a variable dc output voltage. As per as the switching operation is concern, it is also called as "on" or "off" semiconductor switch which is so high in speed. As chopper involves one stage conversion, these are more efficient choppers are generally used in trolley cars, marine hoist, forklift trucks and mine haulers [4].

Chopper performs the operation very instantly. It connects source to load and disconnect the load form source at a fast speed. The power semiconductor devices used for a chopper circuit can be force commutated thyristor, power BJT, GTO, MOSFET and IGBT. These devices are generally represented by a switch. When the switch is "off" no current can flow and the current flows through the load when the switch is "on". The power semiconductor device have on-stage voltage drop of 0.5v to 2.5v across them.

In the operation of chopper, the circuitry used for controlling the on- off period is not shown. During the period T_{on}, chopper is on and load voltage is equal to source voltage V_s. During the period T_{on}, chopper is on and load voltage is equal to source voltage V_s. During the period T_{off}, chopper is off and load voltage is zero. In this manner, a chopped dc voltage is produced at the load terminal. The circuit diagram of chopper as shown in below fig.2 and also fig.3 shows waveform of chopper operation [1].

Average voltage is,

$$V = (T_{on} / (T_{on} + T_{off})) * V_s$$

$$V = (T_{on} / T) * V_s$$

$$V = \alpha V_f \quad \ldots\ldots (1)$$

$$V_o = f * T_{on} * V \quad \ldots\ldots (2)$$

Where,

T_{on}= on-time

T_{off}= off-time

$T=T_{on} + T_{off}$ = chopping period

$\alpha = T_{on} / T_{off}$

f = 1/T =chopping frequency

V_o = output voltage

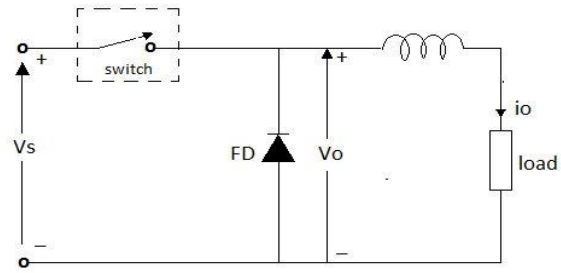

Fig.2: Circuit Diagram of Chopper

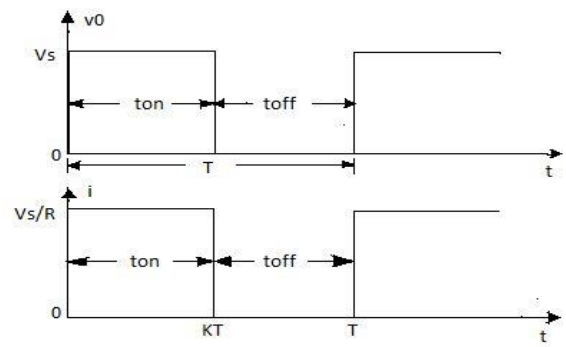

Fig.3: Waveform of Chopper Operation

2.2 Separately Excited DC Motor

In separately excited DC Motor, the armature and field windings are electrically separate from each other along with the field winding is excited by a separate DC source further, the voltage and power equation are same for such type of machine. As circuit diagram of separately excited DC motor shown in below fig.4 [1].

The total input power is,

$$P = V_f I_f + V_t I_a \quad \ldots (3)$$

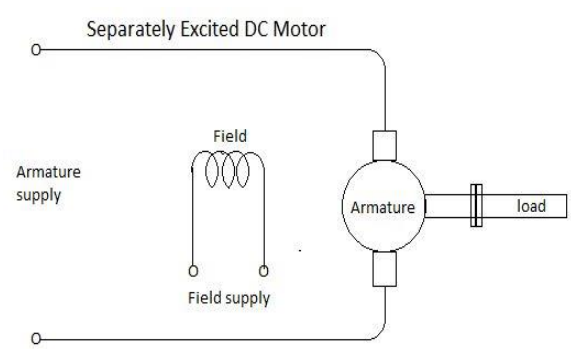

Fig.4: Separately Excited D.C. Motor

Armature current I_a flows in the circuit when DC motor is excited by field current I_f which develops a back EMF and a torque to balance the load torque at a particular speed. The field current I_f shows no changes with respect to change in armature current I_a both winding are supplied separately by controlling V_a and V_f the motor speed can be controlled and It is generally more useful in the application of variable DC voltage for controlling the speed and torque of DC motor [3].

2.3 PI Controller

PI controller is elaborated as proportional integral controller. Fig.5 shows the equivalent circuit of the PI controller. In the Era of industry, the PI controller has been used since last few decades. As the time passes, the development struck the drastic change in the controller manufacture which is nothing but analog to digital conversion. But the control algorithm has been unchanged. The PI controller proved solution for the most industrial applications [3].

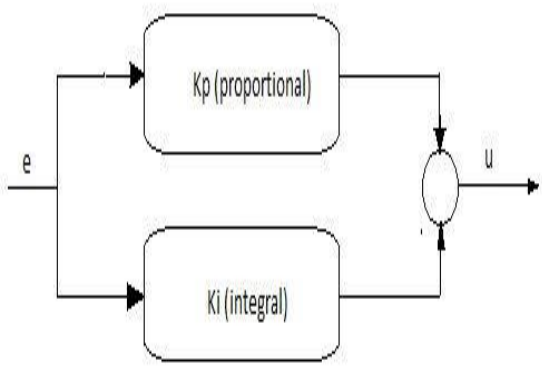

Fig.5: Equivalent Circuit of PI Controller

The final control element get the resulted output signal every sample time (T). The current I and torque T_L are two parameters which is used for adjustment. The main function of PI controller is not to allow the increase the speed of response, so it maintains the constant speed of the DC motor. The PI controller is mainly used to eliminate the steady state error resulting from P controller. But in terms of the speed response and overall stability of system, it has a negative impact. As the PI controller has no ability to predict the future errors of the system it cannot decrease the rise time and eliminate the oscillations. Hence, PI controllers are very often used in industry, especially when speed of the response is not an issue.

3. MATLAB SIMULATION AND RESULTS

Initially, dc source through a chopper which consists of GTO thyristor and a free-wheeling diode is fed to DC motor. The motor use the discrete DC machine provided in the machine library and drives the mechanical load characterized by inertia I, frication coefficient β and load torque T_L. Here, hysteresis current controller compares the sensed current with the reference and generates the trigger signal for the GTO thyristor to force the motor current to follow the reference.

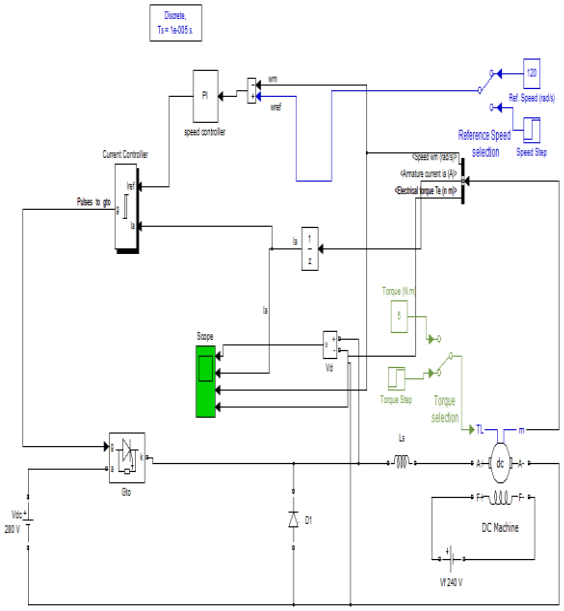

Fig.6: Simulink Model for Speed Control of Separately Excited DC Motor Using Chopper

With the help of proportional – integral controller the reference is produces for the current loop. Further, demonstrations start the simulation and observe the parameter which are motor voltage (V_a), current (I_a)) and speed (W_m) on the scope we will get the result or observation like $0 < t < 0.8$ during the starting and steady state operation. The load torque is $T_L = 5$ N.m. and motor reaches the reference speed (W_{ref} =120 rad/s) given to the speed controller. The initial value of reference torque and speed are set in the two step blocks connected to the T_L torque input of the motor. Notice that during the motor starting the current is maintained to 30 A. according to current limit set in the speed regulator. Observe the current triangular waves varying between 5A and 7A in steady state. Corresponding to the specified hysteresis of 2A and t = 0.8s.the reference speed step the reference speed and increased from 120 rad/sec to 160 rad/s. The speed controller regulates the speed in approximately 0.25s.and the average current stabilize 6.6A.but during the transient period, current is still limited at 30A. at t =1.5 sec. the load torque is suddenly increased from 5 N.m. to 25 N.m. and current increases to 23A while speed is maintained at the 160 rad/s set point. Hence, simulation has been done successfully for the speed control of separately excited DC motor using PI controller. The MATLAB simulation modal is as shown fig.6 above and also simulation results are shown in fig.7 and fig.8 below graph.

3.1 Result of Simulation

At Constant Speed and Torque

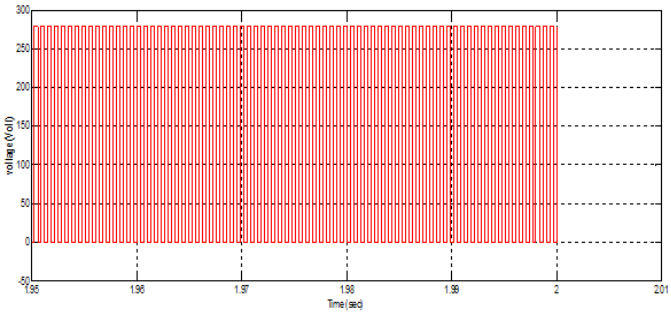

Fig: (a)

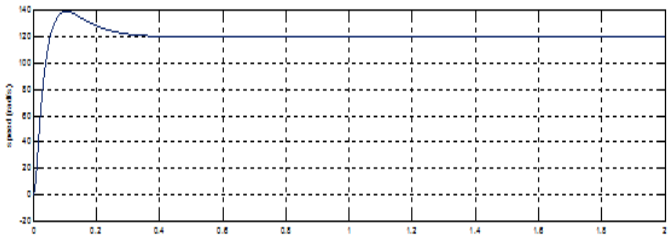

Fig: (b)

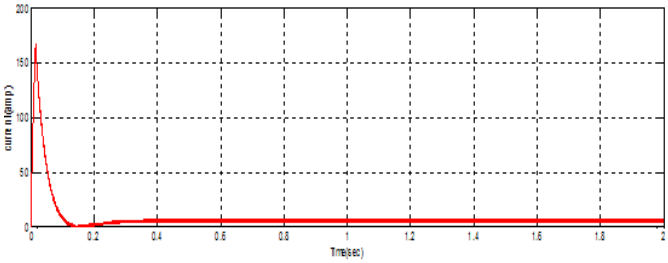

Fig: (c)

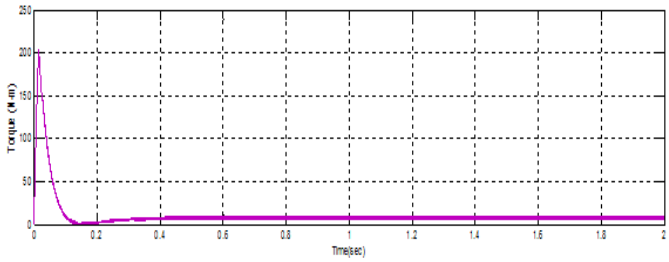

Fig: (d)

Fig.7: Output Waveform of (a) Chopper Voltage,

(b) Motor Speed, (c) Armature Current, & (d) Torque.

At Variable Speed and Variable Torque

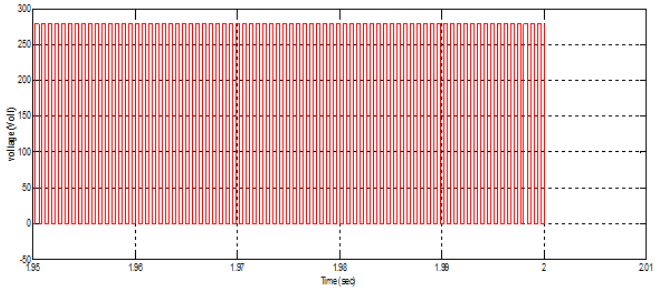

Fig: (e)

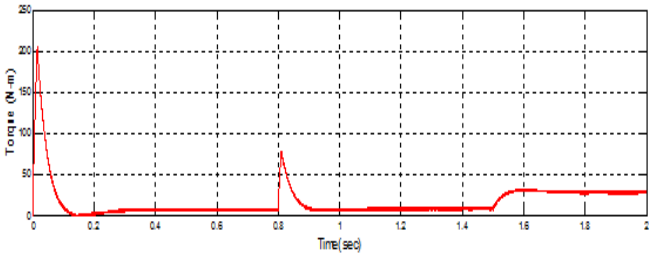

Fig: (f)

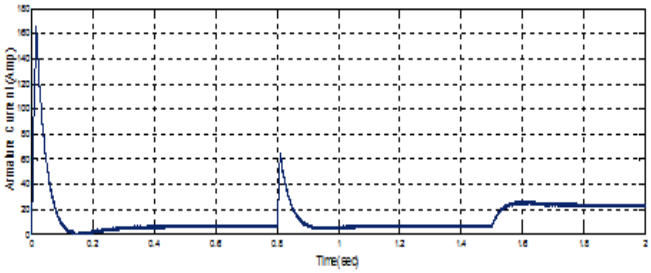

Fig: (g)

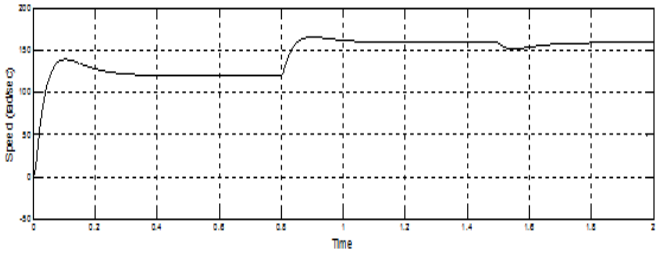

Fig: (h)

Fig.8: Output Waveform of (e) Chopper Voltage,

(f) Torque, (g) Armature Current,& (h) Motor Speed.

4. CONCLUSION

The speed of a DC motor has been successfully controlled by using chopper as a converter. The proposed PI controller gives the better performance under varying speed condition and act

as a controller for close loop control system. Generalized modeling of separately excited DC motor is done and speed of motor is achieved by using matlab simulation.

REFERENCES

[1] Nazanin A. Frasiabi, Mohammadreza Hairi Yazdi, "DC Motor Control Using Chopper", Global Journal of Science, Engineering And Technology, Issue 8, 2013 GJSET Publishing, 2013 ,PP. 67-73.

[2] P. Vinod Kumar, "Design and Implementation of Four Quadrant DC Drive Using Chopper", 978-1-4799-7678-2/15 IEEE 2015.

[3] R. Nagarajan, S. Sathishkumar, K. Balasubramani, C. Boobalan, S. Naveen, N. Sridhar. "Chopper Fed Speed Control of DC Motor Using PI Controller", Journal of Electrical and Electrical Engineering, Volume 11, Issue 3 Ver. I (May-Jan 2016), PP. 65-69.

[4] Varun Rohit Vadapalli, Hemanth Kumar Kella, T. Ravi Sekhar, Y. David Samson, Avinash, "Speed Control of D.C. MOTOR Using Chopper", International Journal of Electrical and Electronics Research, Vol. 3. Issue 1, Month: January 2015, PP: (289-295).

[5] S. R. Bhagwatkar, A. P. Dhande, "A Review on Automatic Closed Loop Speed Control of DC Motor", International Journal of Advanced Research in Computer and Communication engineering .Vol. 4, Issue 1, January 2015.

Authors

Ms. Vrushali R. Pote was born in Maharashtra, India in 1995. She currently pursuing B.E. in Electrical (E & P) in DES'SCOET, Dhamangaon rly, Maharashtra. Her current research interests in speed control improvement.

Ms. Monika K. Suryawanshi was born in Maharashtra, India in 1995. She currently pursuing B.E. in Electrical (E & P) in DES'SCOET, Dhamangaon rly, Maharashtra. Her current research interests in speed control improvement.